SMC

SMC

1：Certification

- System：
  IATF 16949
  ISO9001
  ISO14001
  ISO45001
- ROHS/REACH/ELV：
  Lead frame、Solder、Molding compound、Post plating.
- UL 94：V-0
- MSL : level 1
- Whisker Test： JESD 201 class 2
- Solder bath temperature : 260°C maximum, 10 s

2：Internal Structure Diagram

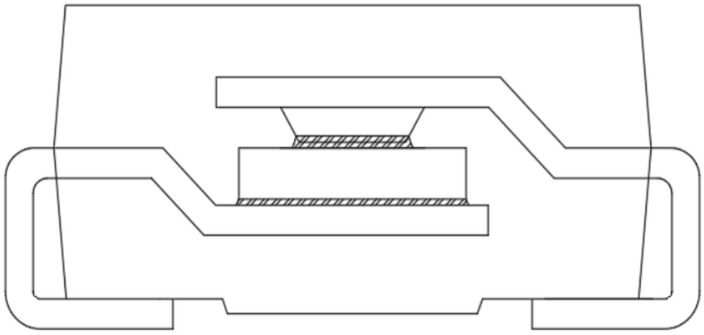

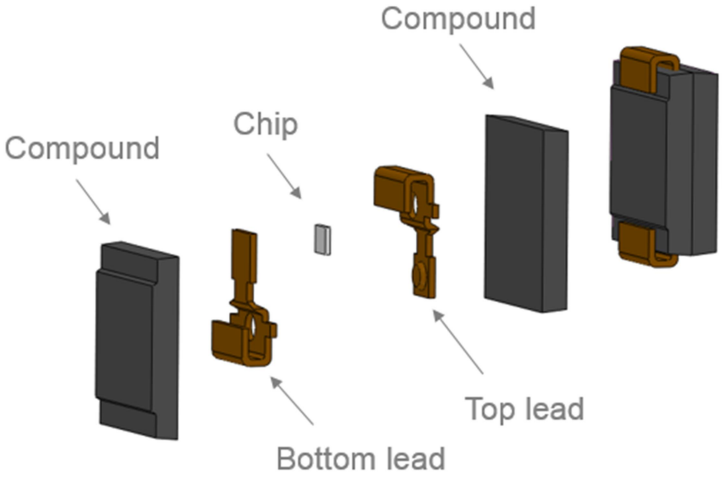

Meet Die Size

	Lead Pad(mm)	Die size(mil)	Wafer thickness (um)
Max	3.60	140.00	350.00
Min	1.20	45.00	110.00

3：Reliability Experiment

Test	Test Condition
HAST	80%VR/130°C/85%R.H.
Temp. Cycling	1000 cycles form -55°to 150°C
UHAST	96 hours at Ta = 130°C, RH = 85%
HTRB	1000 hours 150°
RSH	260°C , 10 s

4：Package Outline Dimensions in millimeters

4.1 POD

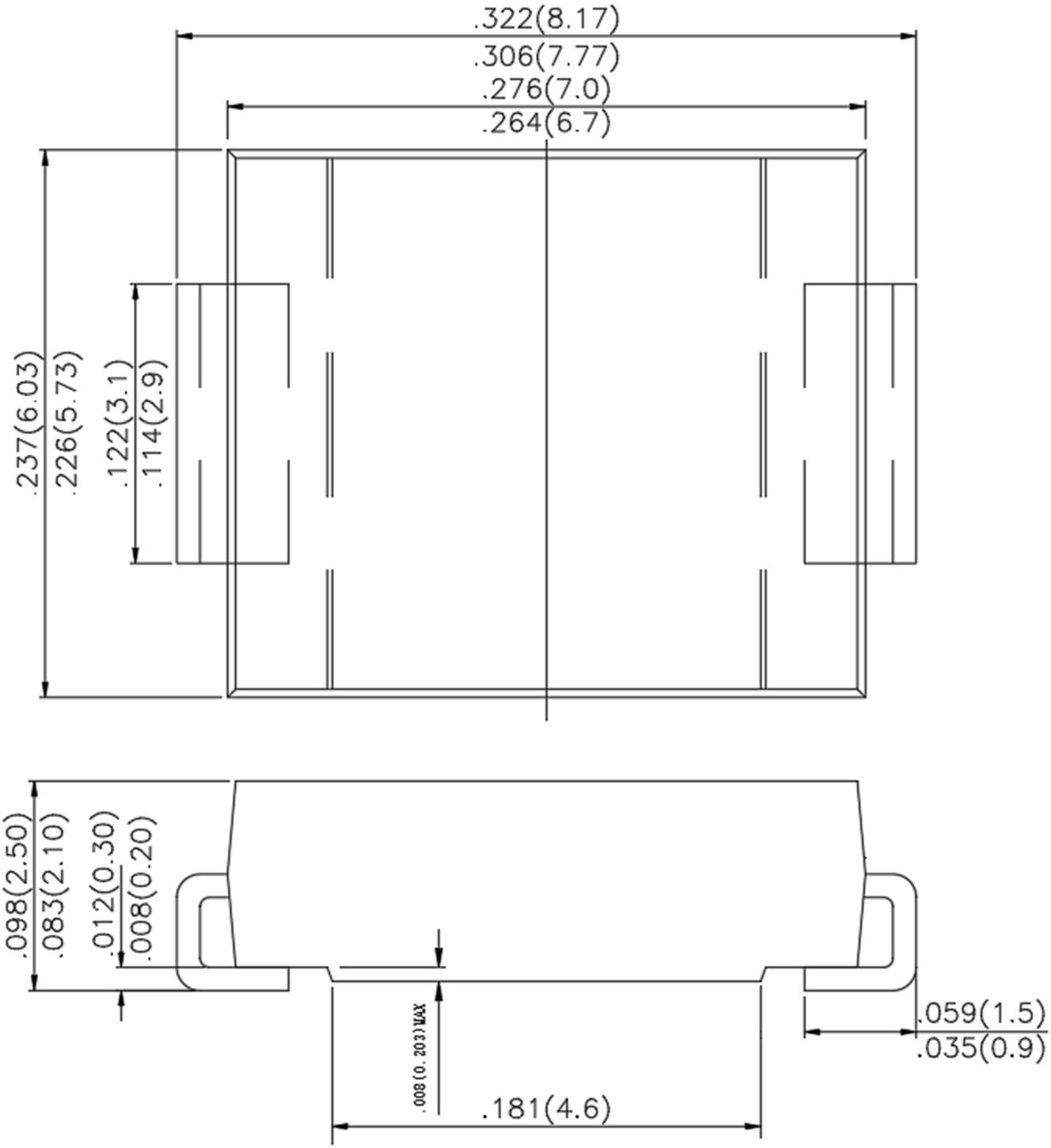
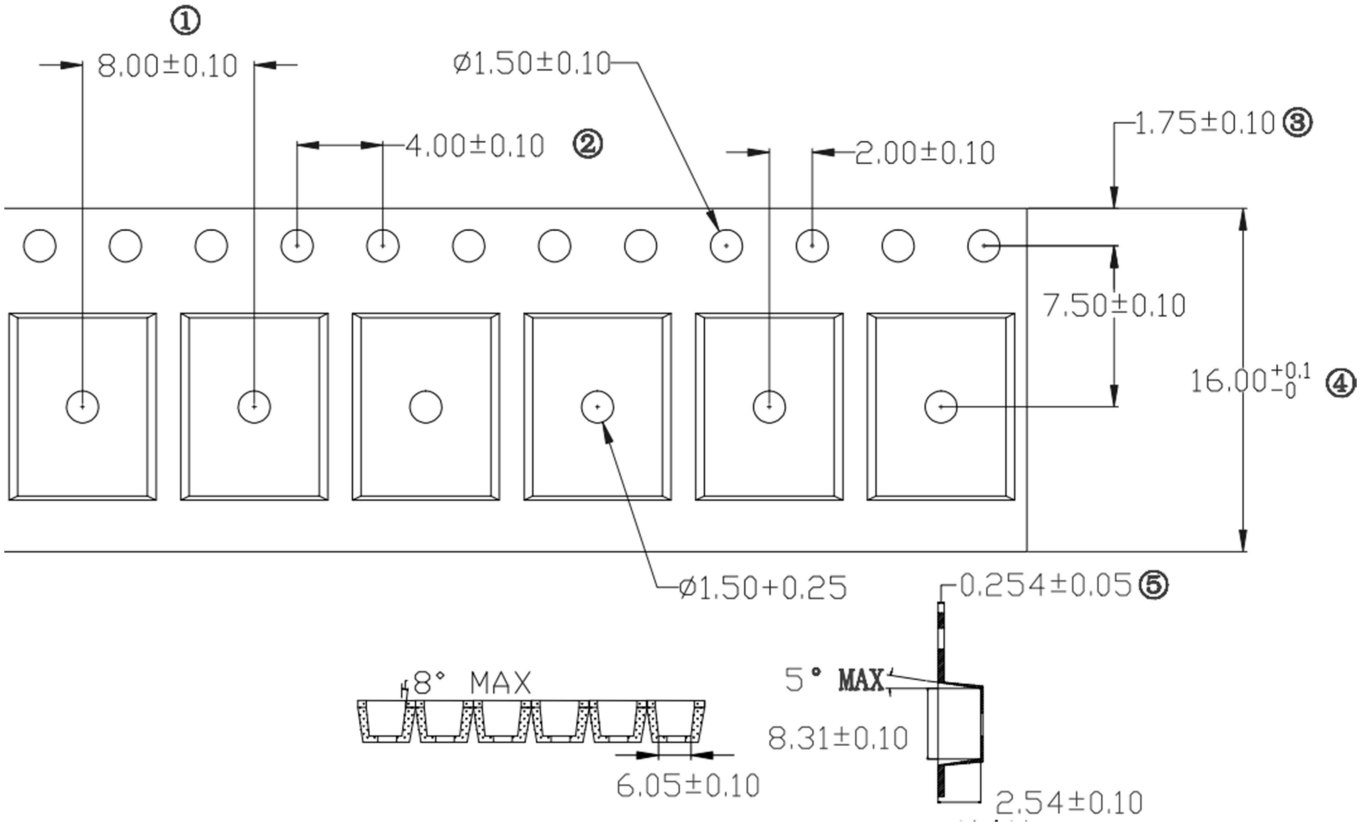
4.2 Package (tape & carrier) Dimensions in millimeters